CROUZET CONTROL

Plug-in Mount 39 mm L2N Part number 84870404

- Relay for controlling level of conductive liquids
- Output relay status display LED
- Sensitivity adjustable from 5 kΩ to 100 kΩ

LN

- Relay for controlling level of conductive liquids
- Regulation of two levels : minimum, maximum
- Empty function
- Plug in (8 or 11 pins)
- Sensitivity adjustable from 5 kΩ to 100 kΩ

LN2

- Combined fill and empty functions
- Combined regulation of pumping out a well and filling a tank
- Plug in (11 pins)

Part numbers

	Type	Supply voltage	Base
84 870 404	L2N	230 V AC	11-pin

Specifications

Supply voltage Un	230 V, 110 V, 48 V, 24 V AC, 50/60 Hz
Operating range	0,85 →1,15 x Un
Max. absorbed power	3 VA
Adjustable sensitivity	5 kΩ→100 kΩ
Measurement accuracy (at maximum sensitivity)	0 →+30 %
Electrode voltage (max)	24 V AC (50/60 Hz)
Electrode current (maximum)	1 mA (50/60 Hz)
Maximum cable capacity	10 nF
Response time high level	300 ms
Response time low level	500 ms
Output relay (according to AC1 resistive load)	1 AgCdO switch 8 A AC max.
Galvanic isolation via transformer (4 kV, 8 mm creepage distance)	Class II
Isolation of contacts and electrodes from power supply	2,5 kV AC
Temperature limits use (°C)	-20 →+60
Temperature limits stored (°C)	-30 →+70
Weight (g)	140

Principles

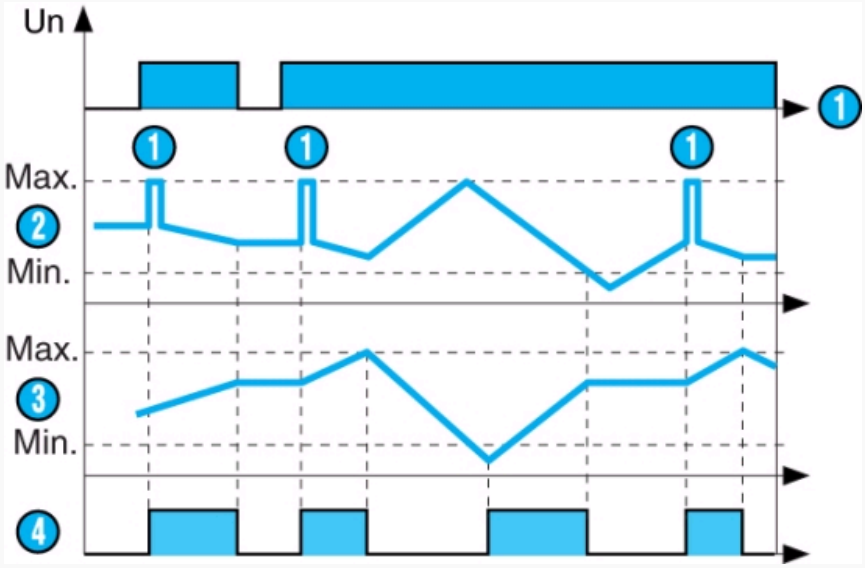

Operating principle

Control of maximum and/or minimum levels of conductive liquids (tap water, sea water, waste water, chemical solutions, coffee etc).

The principle is based on measurement of the apparent resistance of the liquid between two submerged probes. When this value is lower than the preset threshold on the unit front face, the output

relay changes state. To avoid electrolytic phenomena, an AC current funs across the probes. Applications found in environmental, chemical industries and food technology etc.

Combined Fill / Empty function

The output relay changes state when the level of liquid in the tank reaches the "max" electrode, with the "min" electrode submerged. It returns to its initial state when the "min" sensor is no longer in contact with the liquid.
When the level of liquid in the well reaches the "min" electrode, the pump stops.
If, on power-up or after a power break, the "max" electrode in the tank is above the surface, reset the device by pressing the PB pushbutton.

Note

The probe wire (max length 100 metres) does not have to be screened, but avoid mounting it in parallel with the power supply wires. A screened wire can be used, with the screening connected to the common.

Nº	Legend
1	Push button
2	Well
3	Tank
4	Output relay

Dimensions (mm)

LN2

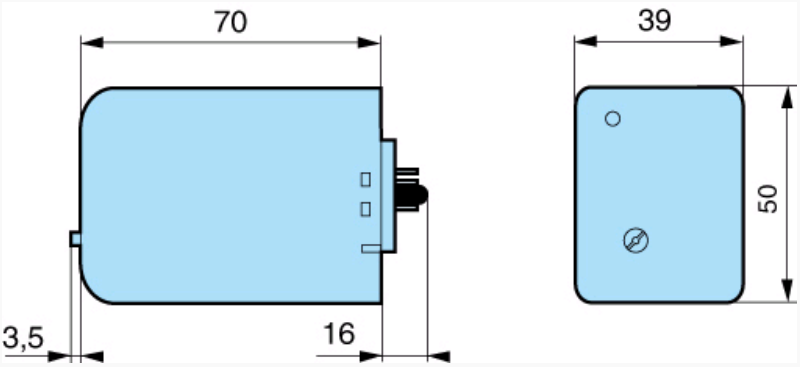

Dimensions (mm)

LN2 : connector sockets
8-pin : 25 622 129
11-pin : 25 622 078

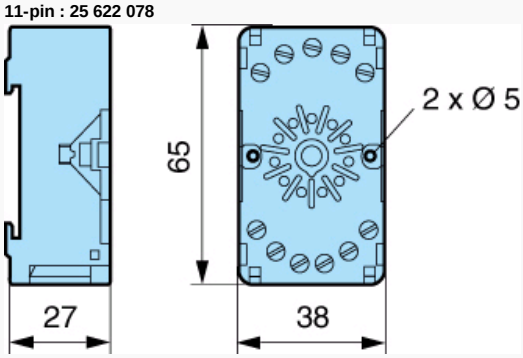

TRADOS Empty Field

Connections

L2N

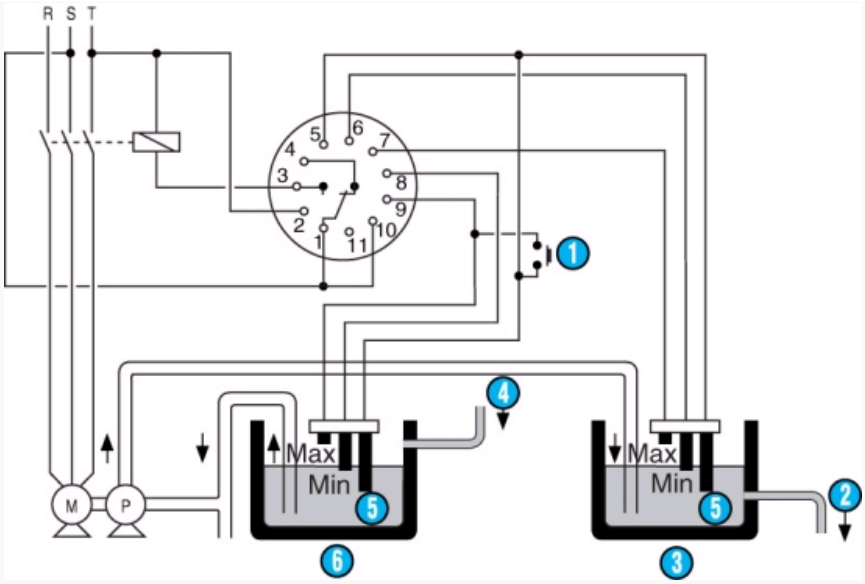

Special base : - Pin 5 : common becomes max. - Pin 7 : maxi. becomes common

Nº	Legend
1	Push button
2	Output
3	Tank
4	Input
5	Common
6	Wells