CROUZET CONTROL

DIN Rail Mount 22.5 mm EUL Part number 84872021

- Voltage monitoring
- 2 relays to cover 6 ranges of measurement : 0.2V to 600V
- Automatic recognition AC/DC
- Frequency up to 500 Hz

Part numbers

	Type	Measurement range	Supply voltage
84 872 021	EUL	0,2 →60 V	24 V AC

Specifications

Supply voltage Un	24 V, 120 V, 230 V, 50/60 Hz (galvanic isolation via transformer) 24 V (no galvanic isolation). In this case, the product power supply and measuring circuit power supply must be electrically isolated.
Operating range	0,85 1,15 Un
Maximum power consumption	3 VA / 1 W
Frequency of measured signal	40 500 Hz
Threshold Ue	Adjustment from 10 to 100 % of the measurement range
Hysteresis	Adjustment from 5 to 50 % of the displayed threshold
Display precision	± 10 % of the full scale
Delay on thresold crossing Tt	0,1 3 s ±10 %
Output relay	1 AgNi changeover, 8 A max
Temperature Use (°C)	-20 →+60
Storage temperature (^{0}C)	-30 →+70

Inputs	E1-M E2-M E3-M
Sensitivity	E1-M : 0,2 to 2V E2-M : 1 to 10V E3-M : 6 to 60V
Input resistance	E1-M : 2kΩ E2-M : 10kΩ E3-M : 60kΩ

Principles

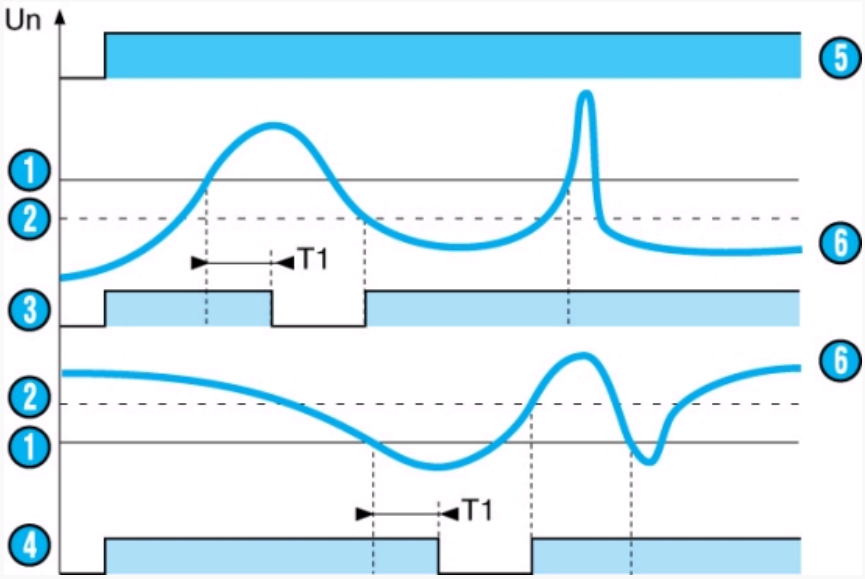

When the value of the controlled voltage, AC or DC, reaches the treshold Ue displayed on the front face, the output relay changes state at the end of a time delay T1, which can be set on the front face at between 0.1 and 3s.
Once the voltage drops below 5 to 50 % of the treshold (hysteresis), the output relay changes state again instantly. Changing the hysteresis onthe front face does not therefore modify the value of the preset treshold.

Nº	Legend
1	Treshold Ue
2	Hysteresis
3	UPPER function
4	UNDER function
5	Unit power-up
6	Controlled voltage

Principles

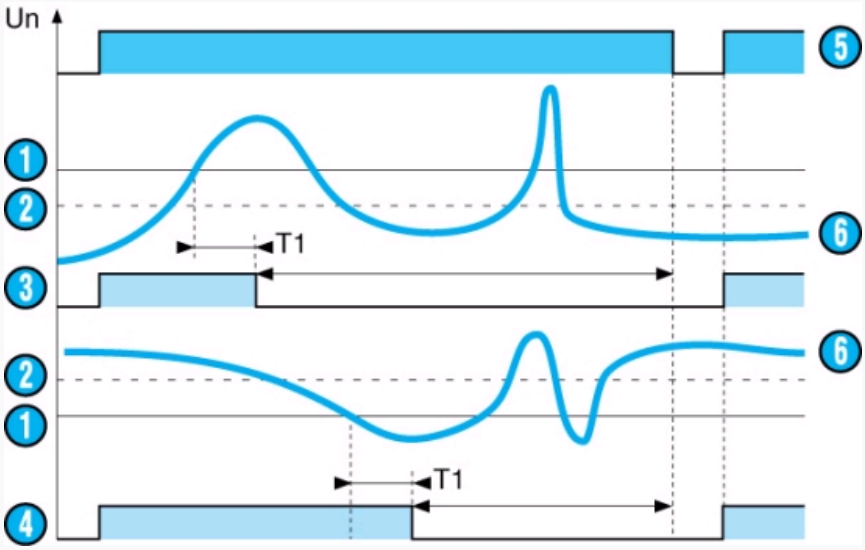

When the value of the controlled voltage, AC or DC, reaches the treshold Ue displayed on the front face, the output relay changes state at the end of a time delay T1, which can be set on the front face at between 0.1 and 3s and remains latched in this position.

Nº	Legend
1	Treshold Ue
2	Hysteresis
3	UPPER function
4	UNDER function
5	Unit power-up
6	Controlled voltage
7	*** TRADUCTION MANQUANTE ***

Dimensions (mm)

EUL / EUH

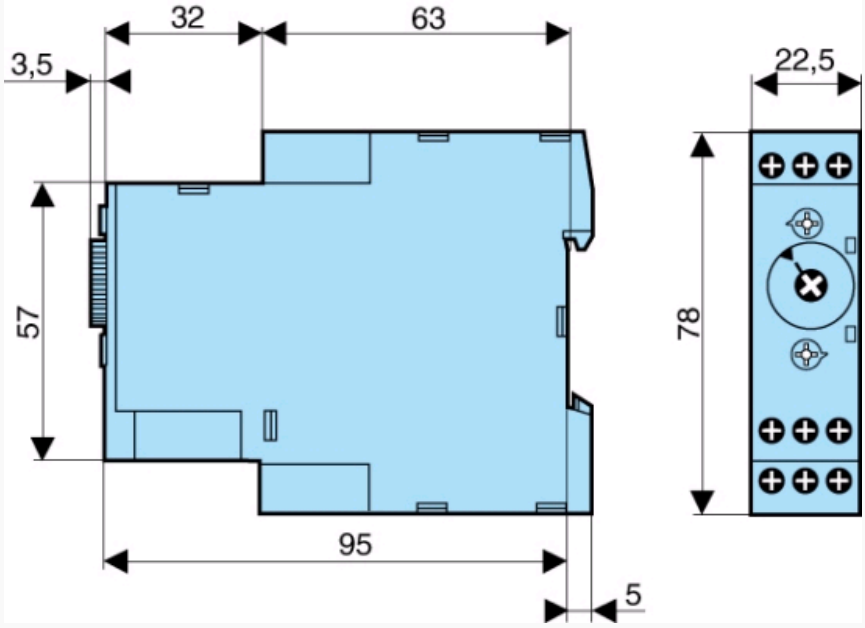

Connections

EUL

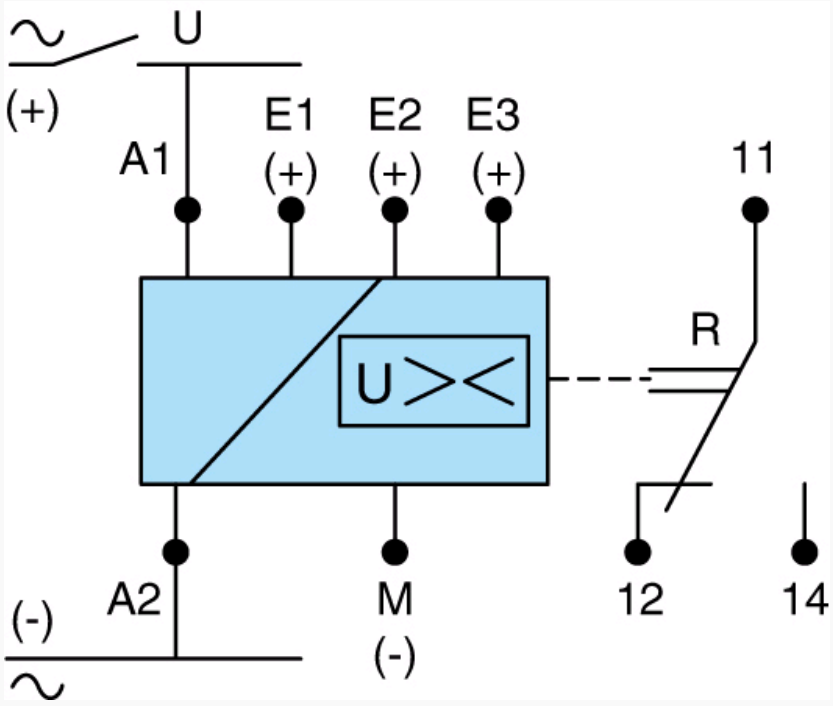

Legend
A1 - A2 : Supply voltage

Connections

EUL / EUH

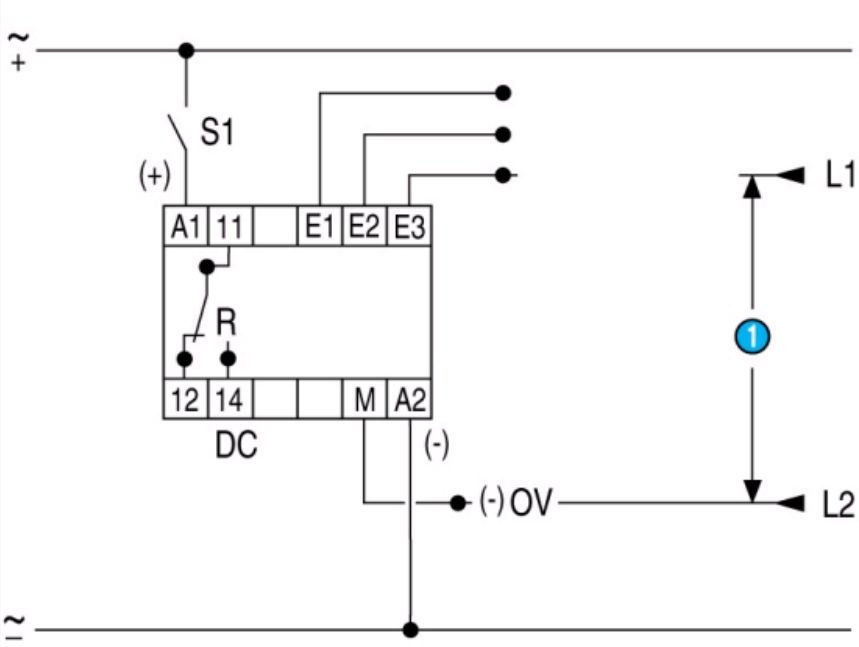

Nº	Legend
1	Supply voltage to be monitored