CROUZET CONTROL

Screw-fixing impulse - CIM 24 x 48 Without manual reset Part number 99776905

- 5 or 6 digits, height of digits 4 mm
- With or without manual reset
- White digits on a black background

Part numbers

	Type	Number of digits	Operating frequency (Hz)	Voltages
99776905	Without manual reset	6	VDC	110 VDC

Specifications

General characteristics

Counting capacity	999,999 impulses without manual reset 99,999 impulses with manual reset
Height digits (mm)	4
Max. count rate	VAC→18 impulses/s VDC→25 impulses/s
Min. count rate	VAC→28 ms VDC→20 ms
Min pause time between 2 pulses	VAC→28 ms VDC→20 ms
Max. pulse length (count coil)	Unlimited
Voltage variation	+ 10 % / -15 % Un
Consumption	24 VAC / 115 VAC : 1,1 VA 230 VAC : 2,1 VA 110 VDC : 1 W 24 VDC : 0,8 W
Mechanical life count function (operations)	50×10^6
Test voltage according to standard IEC 255-5	U < 60 V : 500 V U > 60 V : 2 000 V
Protection Housing	IP40
Degree of terminal protection	IP00
Environmental protection	Plated or stainless steel components
Maintenance	None
Operating position	Any
Temperature limits use (°C)	-10 →+60
Temperature limits stored (°C)	-40 →+80
Certifications	CE
Connection	6.35 Faston connectors or screw terminals
Mounting	2 M3 screws - F90° on front face
Weight (g)	50

Dimensions (mm)

9977690 - 6 digits

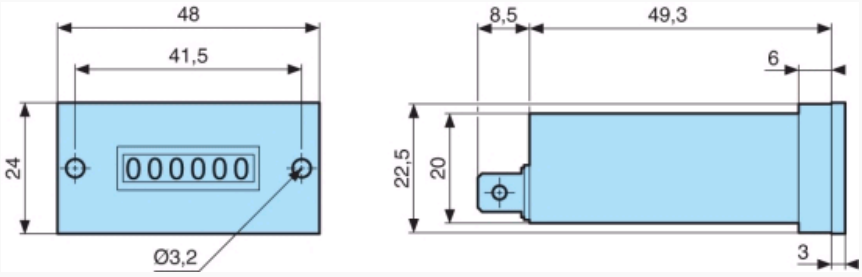

Dimensions (mm)

9977690 - Rear faces

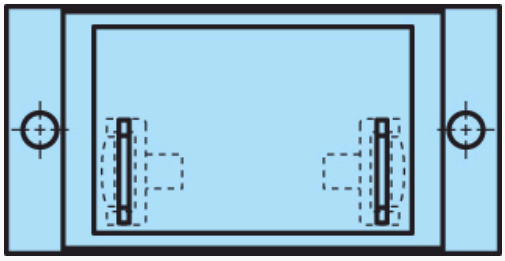

Dimensions (mm)
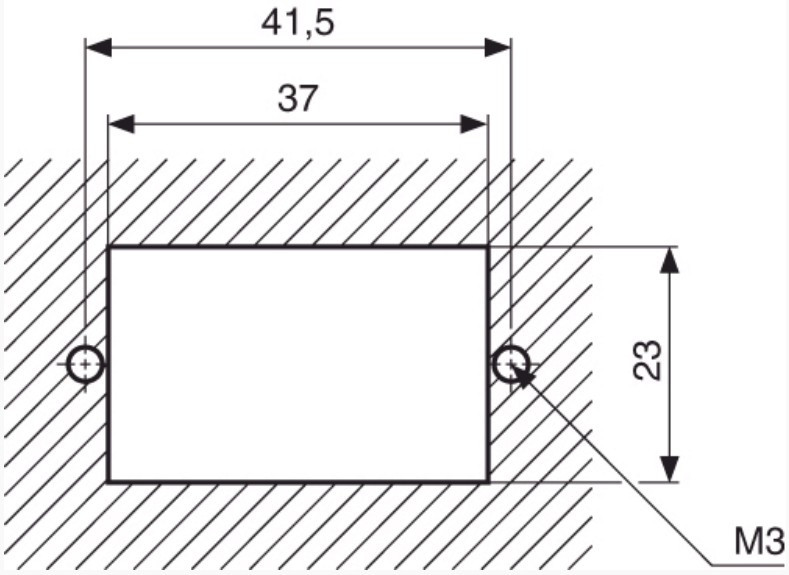
Panel cut-out